HIKVISION

DS-2CDB47KHT-LIU
4 MP Fixed Mini Turret Network Camera

ColorVu

AcuSense

- High quality imaging with 4 MP resolution
- Support Human and Vehicle Detection
- Smart Hybrid Light: advanced technology with long range
- Efficient H.265+ compression technology
- Built-in microphone for real-time audio security
- Water and dust resistant (IP67)

▪ Specification

Camera	
Image Sensor	1/2.8" Progressive Scan CMOS
Max. Resolution	2560 × 1440
Min. Illumination	Color: 0.0005 Lux @ (F1.0, AGC ON),0 Lux with light
Shutter Time	1 s to 1/10000 s
Day & Night	IR cut filter
Angle Adjustment	Pan: 0° to 360°,tilt: 0° to 75°,rotate: 0° to 360°
Lens	
Lens Type	Fixed focal lens, 2.8 and 4 mm optional
Focal Length & FOV	2.8 mm, horizontal FOV 101.5°, vertical FOV 54.6°, diagonal FOV 122.1° 4 mm, horizontal FOV 84.1°, vertical FOV 45.6°, diagonal FOV 99.1°
Lens Mount	M12
Iris Type	Fixed
Aperture	F1.0
DORI	
DORI	2.8 mm, D: 63 m, O: 25 m, R: 12 m, I: 6 m 4 mm, D: 77 m, O: 30 m, R: 15 m, I: 7 m
Illuminator	
Supplement Light Type	IR,White Light
Supplement Light Range	Up to 30 m
Smart Supplement Light	Yes
IR Wavelength	850 nm
Video	
Main Stream	50 Hz: 25 fps (2560 × 1440, 1920 × 1080, 1280 × 720) 60 Hz: 24 fps (2560 × 1440, 1920 × 1080, 1280 × 720)
Sub-Stream	50 Hz: 25 fps (1280 × 720, 640 × 480, 640 × 360) 60 Hz: 24 fps (1280 × 720, 640 × 480, 640 × 360)
Third Stream	50 Hz: 1 fps (1280 × 720, 640 × 480, 640 × 360) 60 Hz: 1 fps (1280 × 720, 640 × 480, 640 × 360)
Video Compression	Main stream: H.265+/H.265/H.264+/H.264, Sub-stream: H.265/H.264/MJPEG, Third stream: H.265/H.264
Video Bit Rate	32 Kbps to 8 Mbps
H.264 Type	Baseline Profile,Main Profile,High Profile
H.265 Type	Main Profile
Bit Rate Control	CBR,VBR
Region of Interest (ROI)	1 fixed region for main stream and sub-stream
Scalable Video Coding (SVC)	H.264 and H.265 encoding
Audio	
Audio Type	Mono sound
Audio Compression	G.711ulaw/G.711alaw/G.722.1/G.726/MP2L2/PCM/AAC-LC/MP3
Audio Bit Rate	64 Kbps (G.711)/16 Kbps (G.722.1)/16 Kbps (G.726)/32 to 160 Kbps (MP2L2)/16 to 64 Kbps (AAC-LC)
Audio Sampling Rate	8 kHz/16 kHz
Environment Noise Filtering	Yes

Network	
Protocols	IPv4, IPv6, TCP/IP, ICMP, DHCP, DNS, HTTP, RTP, RTSP, RTCP, NTP, IGMP, UDP, QoS, FTP, SMTP, UPnP
Simultaneous Live View	Up to 6 channels
API	ONVIF (Profile S, Profile T, Profile G),ISAPI,SDK
User/Host	Up to 32 users 3 user levels: administrator, operator, and user
Security	Password protection, complicated password, watermark, basic and digest authentication for HTTP, WSSE and digest authentication for Open Network Video Interface, security audit log, host authentication (MAC address)
Client	iVMS-4200,Hik-Connect
Web Browser	Plug-in free live view: Chrome 57.0+, Firefox 52.0+, Edge 89+, Safari 11 Local service: Chrome 57.0+, Firefox 52.0+, Edge 89+
Image	
Image Settings	Rotate mode,saturation,brightness,contrast,sharpness,gain,white balance,adjustable by client software or web browser
Day/Night Switch	Day,Night,Auto,Schedule
Wide Dynamic Range (WDR)	120 dB
SNR	≥ 52 dB
Image Enhancement	BLC,HLC,3D DNR
Privacy Mask	4 programmable rectangle privacy masks
Interface	
Ethernet Interface	1 RJ45 10 M/100 M self-adaptive Ethernet port
On-Board Storage	NA
Built-in Microphone	Yes
Built-in Speaker	NA
Reset Key	NA
Event	
Basic Event	Motion detection (support alarm triggering by specified target types (human and vehicle)),video tampering alarm,exception
Smart Event	Line crossing detection, intrusion detection, region entrance detection, region exiting detection (support alarm triggered by specified target types (human and vehicle))
Linkage	Upload to memory card, trigger recording, upload to FTP, notify surveillance center, send email, trigger capture, audible warning, flashing light
General	
Power	12 VDC ± 25%, 0.52 A, max. 6.2 W, Ø5.5 mm coaxial power plug, reverse polarity protection, PoE: IEEE 802.3af, Class 3, max. 7.5 W
Material	Metal
Dimension	Ø127.3 mm × 96.3 mm (Ø5" × 3.8")
Package Dimension	150 mm × 150 mm × 141 mm (5.91" × 5.91" × 5.55")
Weight	Approx. 555 g (0.9 lb.)
With Package Weight	Approx. 745 g (1.4 lb.)
Storage Conditions	-30 °C to 60 °C (-22 °F to 140 °F). Humidity 95% or less (non-condensing)
Startup and Operating Conditions	-30 °C to 60 °C (-22 °F to 140 °F). Humidity 95% or less (non-condensing)

Language	10 languages :English, Russian, Ukrainian, Arabic, Spanish, French, Portuguese, Turkish, Polish, German
General Function	Heartbeat,anti-banding,mirror,password reset via email,password protection
Flashing Light	NA
Approval	
EMC	CE-EMC: EN 55032:2015+A1:2020, EN 50130-4:2011+A1:2014, EN IEC 61000-3-2:2019+A1:2021, EN 61000-3-3:2013+A1:2019+A2:2021
Safety	CB: IEC 62368-1:2014+A11, CE-LVD: EN 62368-1:2014/A11:2017
Environment	CE-RoHS: 2011/65/EU, WEEE: 2012/19/EU, Reach: Regulation (EC) No 1907/2006
Protection	IP67:IEC 60529-2013

▪ Dimension

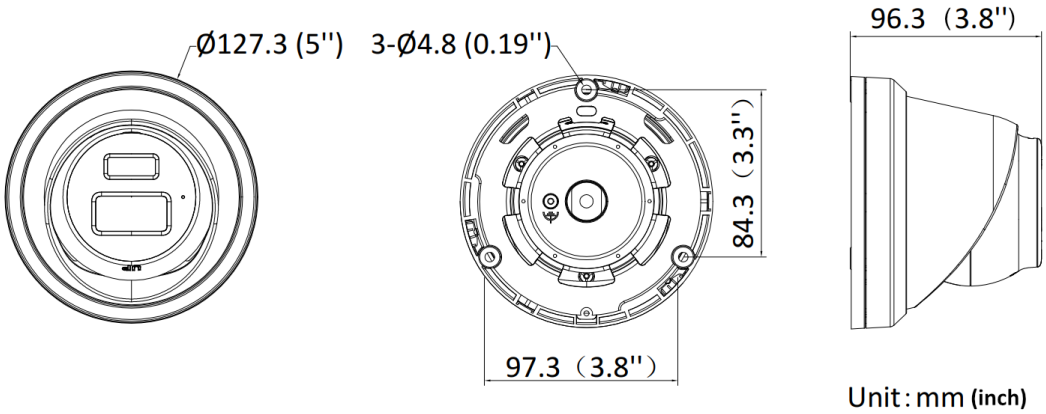

▪ Accessory

▪ Optional

DS-1275ZJ-SUS	DS-1273ZJ-130-TRL	DS-1275ZJ-S-SUS	DS-1271ZJ-130-TRL	DS-220AZJ-130-WA
DS-1281ZJ-M	**DS-1273ZJ-130B-TRL**	**DS-1276ZJ-SUS**	**DS-1280ZJ-DM8**	**DS-220AZJ-145-WA**

▪ Installation Methods

Vertical Pole Mounting DS-1275ZJ-SUS+DS-1280ZJ-DM8	Vertical Pole Mounting DS-1275ZJ-S-SUS+DS-220AZJ-145-WA	Wall Mounting DS-1273ZJ-130-TRL+DS-1253ZJ-L	Wall Mounting DS-220AZJ-130-WA	Wall Mounting DS-1273ZJ-130B-TRL
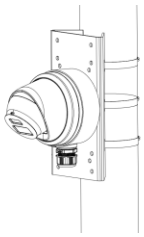		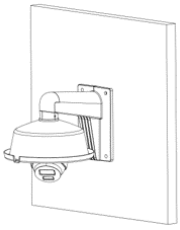		
Wall Mounting DS-220AZJ-145-WA	**Pendant Mounting DS-1271ZJ-130-TRL**	**Inclined Ceiling Mounting DS-1281ZJ-M**	**Corner Mounting DS-1276ZJ-SUS+DS-1273ZJ-130B-TRL**	**Junction Box DS-1280ZJ-DM8**
			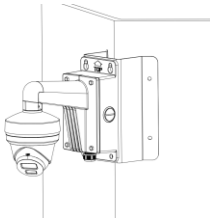	

See Far, Go Further

www.hikvision.com
support@hikvision.com

© Hangzhou Hikvision Digital Technology Co., Ltd. Unless otherwise agreed, Hikvision makes no warranties, express or implied. We reserve the right to introduce modifications without notice.